REV	DATE	ECO	DESCRIPTION	BY	CK
00	3/93		RELEASED		
01	9/93	1215	REV UL CERT.	KJ.	GO

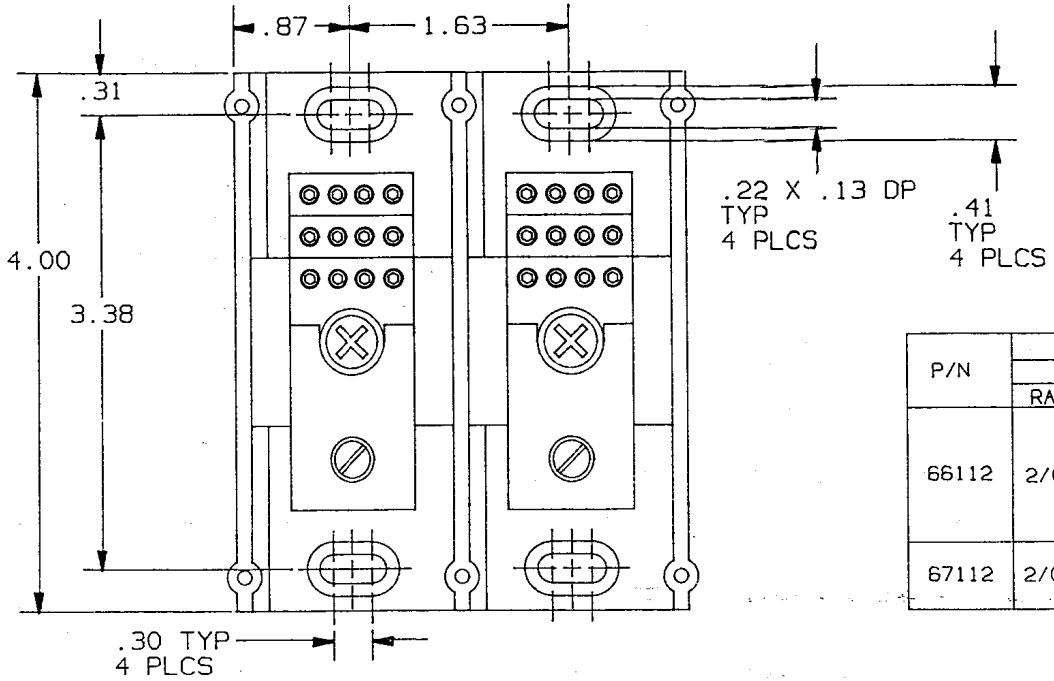

P/N	WIRE RANGE & TORQUE (IN-LBS)					UL		CSA
	PRIMARY			SECONDARY				
	RANGE	TORQUE		RANGE	TORQUE	FILE #	GUIDE #	REPORT #
66112	2/0-#14	2/0-#3	50	#10-#14	#10-#14 15			LR69363
		#4- #6	45					
		#8	40					
		#10- #14	35					
67112	2/0-#14	2/0-#6	120	#10-#14	#10-#14 15	E73571	XCFR2	LR15469
		#8 - #14	50					

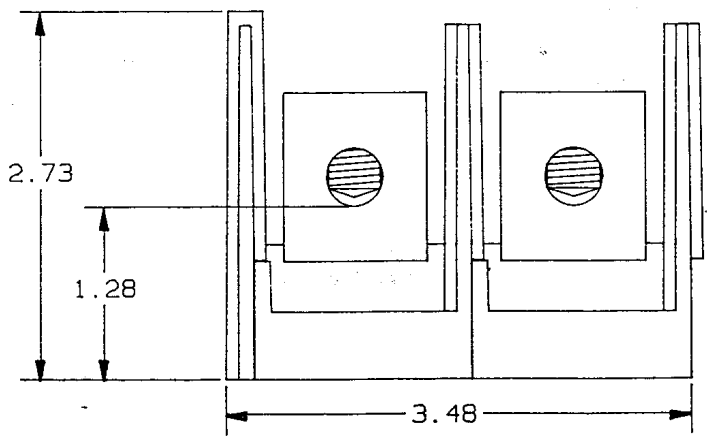

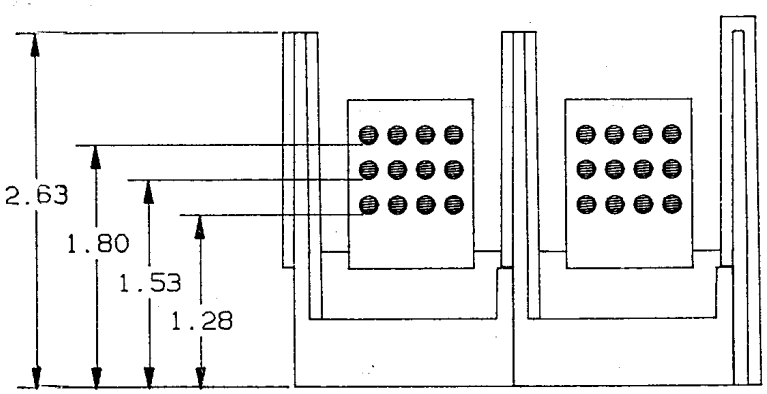

Newburyport
OCT 20 1993

P/N 66112 (CU ONLY)
67112 (CU-AL)

3. 66112 USES 3/8-24 SLOTTED SET SCREW
   67112 USES 7/16-20 HEX SET SCREW
2. (1) 2/0 X (12) #10, 2 POLE, 600V.
1. MATERIAL COMPOSITION AND RATING:
   BASE: THERMOPLASTIC 125°C RTI
   CONNECTOR: ALUMINUM OR COPPER ALLOY-TIN PLATED

NOTES: UNLESS OTHERWISE SPECIFIED

GOULD
CIRCUIT PROTECTION DIV.
GOULD INC.
P.O. BOX 729
MARBLE FALLS, TX 78654

DRAWN BY:	DATE:	INIT. REL.
KDS	3/93	
CHECKED BY:	DATE:	SCALE:
GHO	3/93	NONE

TOLERANCE TO BE APPLIED UNLESS OTHERWISE SPECIFIED: .XXXX±.0005; .XXX±.005; .XX±.01; .X±.02; X/X±1/32
UNSPECIFIED ANGLES±1°, SPECIFIED ANGLES±0°30'
DIMENSIONS APPLY AFTER PLATING
ALL SURFACES TO BE 125 UNLESS OTHERWISE SPECIFIED
BREAK ALL SHARP EDGES
THIS DRAWING AND ALL INFORMATION THERE ON IS THE PROPERTY OF GOULD INC. AND IS SUBJECT TO RETURN ON DEMAND. THIS INFORMATION IS CONFIDENTIAL AND MUST NOT BE MADE PUBLIC OR COPIED UNLESS AUTHORIZED.
REFDOC:.

DESCRIPTION	IDENTIFICATION NO. & REVISION	
PDB,(1)2/0 X (12)#10	05B0428	01